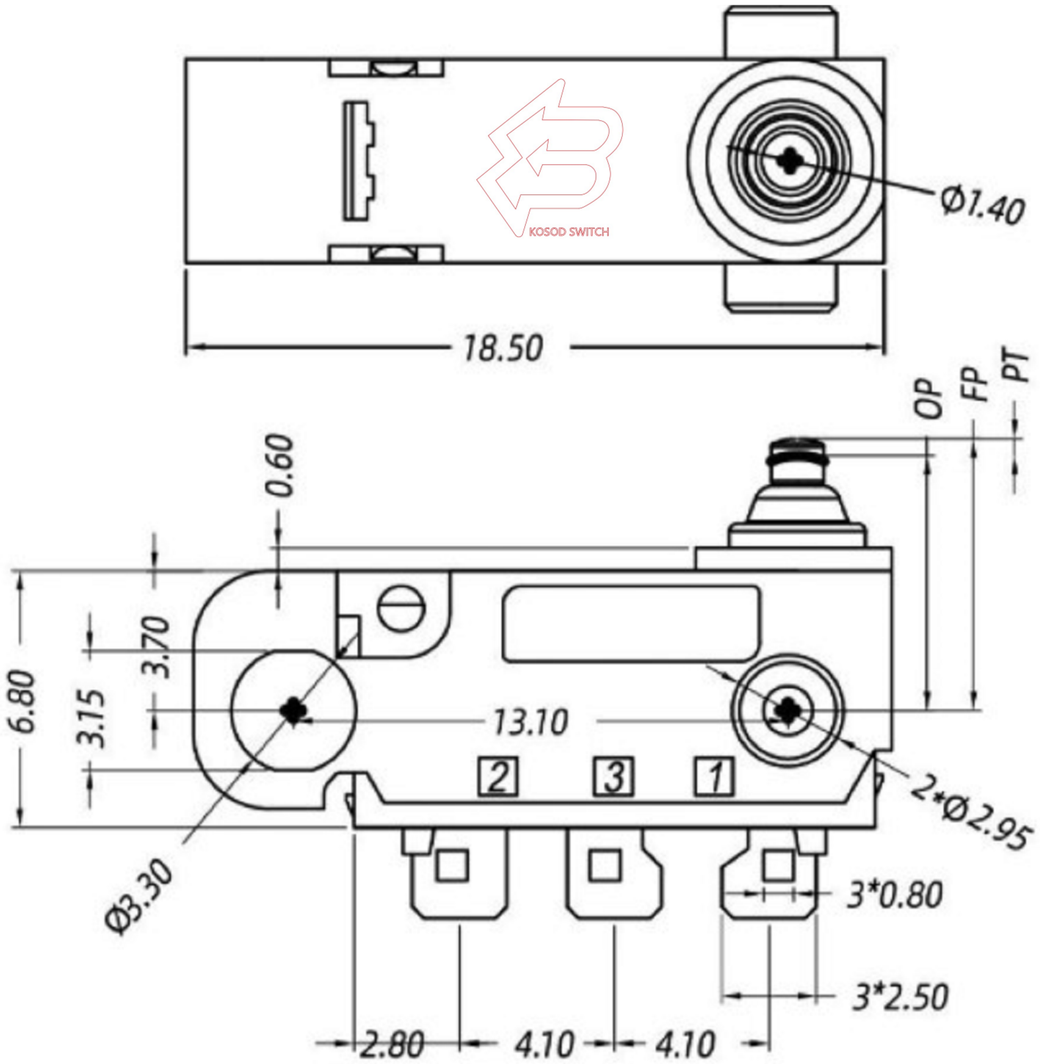

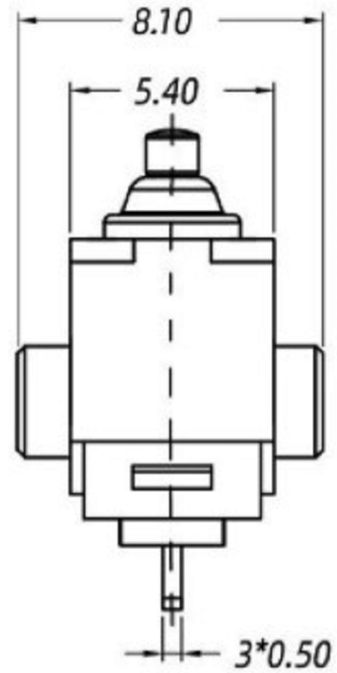

SCHEMATIC

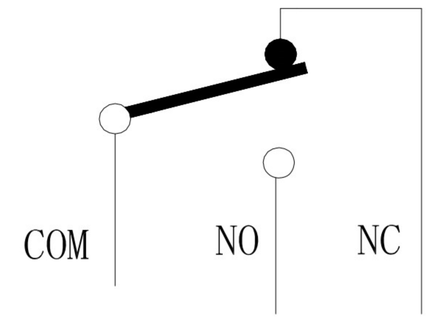

防水微动开关

1.微动开关型号 MICRO SWITCH MODEL: LXW-3-6-5C-AS
2.焊线端子 SOLDER CONNECTOR TYPE;
单刀单掷 SINGLE POLE SINGLE THROW
3.额定值 RATING: ▲3A 125VAC μ 25T85
1A 125VAC μ 25T85
0.1A 125VAC μ 25T85
3A 12/24/30/48VDC μ25T85
1A 12/24/30/48VDC μ25T85
0.1A 12/24/30/48VDC μ25T85
4.接触电阻 CONTACT RESISTANCE: <50mΩ (INITIAL)
5.绝缘电阻 INSULATION RESISTANCE: ≥100MΩ(DC500V/1MIN)
6.介电强度 DIELECTRIC STRENGTH: 1500V /5mA /1MIN
7.机械寿命 MECHANICAL LIFE: >100000 CYCLES
8.电气寿命 ELECTRICAL LIFE: >10000 CYCLES
9.端子手工焊接条件 SOLDER ABILITY OF TERMINAL: MAX260°C, 3S
10.操作力 OPERATION FORCE:100±50gf
11.所有部件均使用环保材料 ALL MATERIALS ARE RoHS COMPLIANT

ITEM NO.	DESCRIPTION	DRAWN	DATE

東莞市高迪電子有限公司
DONG GUAN GAO DI ELECTRONICS CO. , LTD

TOLERANCE UNLESS OTHERWISE STATED : Up to 5 ±0.2; Above 5 ~ 15 ±0.3; Above 15 ~ 30 ±0.4; Above 30 ~ 50 ±0.5; Angle ±0.3°

3RD. ANGEL'S | UNITS | MM

DRAWN BY: Ming Ming Zou	DATE 10/31/13	MAT'L	
CHECKED BY: Ning Ning Su	DATE 10/31/13	FINISH	
APPROVED BY: Jia Xiang	DATE 10/31/13	SCALE	1 : 1
		SHEET NO.	1 of 1

TITLE	SWITCH		
MODLE	MICRO SWITCH		
DWG NO.	GD-LXW-3-6-AS	SIZE	A4
PART NO.		VER	R