SBC-160S2BH-20xx-S410

鍍層厚度 :

Blank : 1u"
1 : 3u"
2 : 15u"
3 : 30u"

Housing Color :

Black : Blank
White : W

PIN ASSIGNMENTS

A1	GND	B12	GND
A2		B11	
A3		B10	
A4	VBUS	B9	VBUS
A5	CC1	B8	SBU2
A6	DP1	B7	DN2
A7	DN1	B6	DP2
A8	SBU1	B5	CC2
A9	VBUS	B4	VBUS
A10		B3	
A11		B2	
A12	GND	B1	GND
PIN	SIGNAL NAME	PIN	SIGNAL NAME

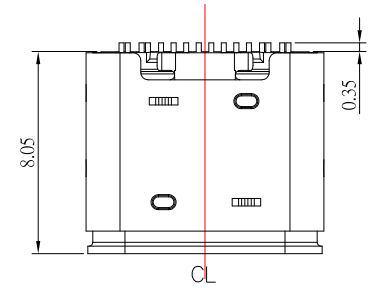

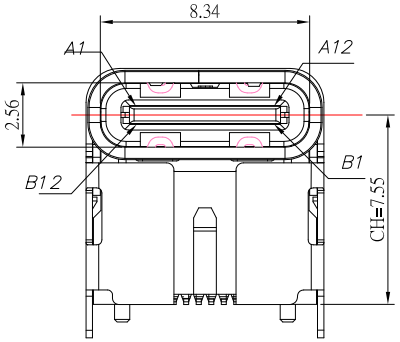

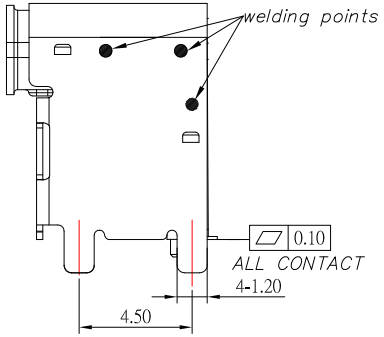

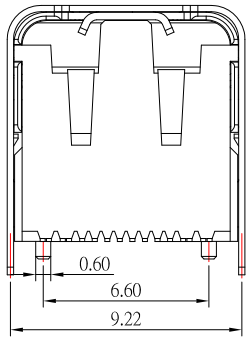

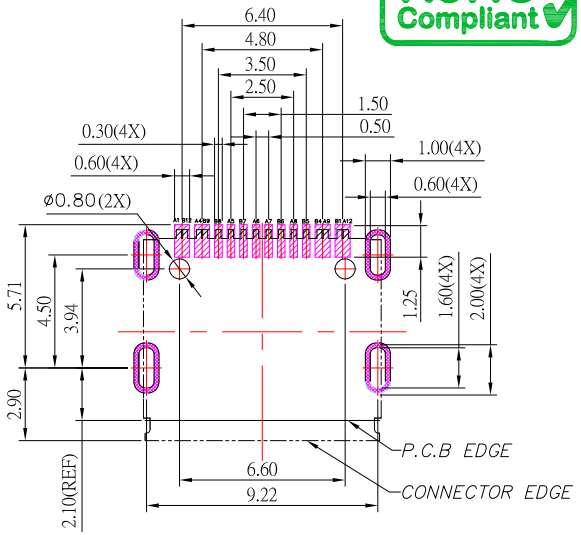

RECOMMENDED P.C.B. LAYOUT

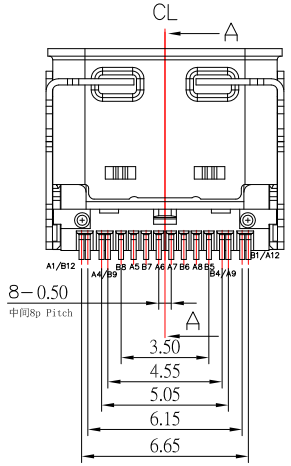

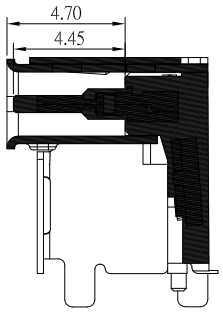

SECTION: A－A

SPECIFICATIONS

Electrical:

1.Rating: 5.0 A

2.Voltage: 20.0V

3.Dielectric Withstand Voltage: 100V AC

4.Contact Resistance: 40 mΩ Max

5.Insulation Resistance: 100 MΩ Min

Mechanical:

1.Connector Mate and Unmate Force

1.1 Mate force: 5~20 N

1.2 Unmate force: 8~20 N

Material:

1.Housing: LCP

2.Contact: C7025

3.Shell: SUS

Finish:

1.Contact: Plated Gold in Mating Area ;

Tin Plated on Solder Balls ;

Nickel under plated overall

2.Shell: Nickel under Plated surface layer

ITEM NO.	DESCRIPTION	DRAWN	DATE
5	新增尺寸	Jack	033023
4	更新Voltage: 20.0V	Jack	112322
3	新增顏色選項	Jack	100422
2	更新樣式	Jack	063022
1	更新樣式及尺寸	Jack	051221

東莞市高迪電子有限公司
DONG GUAN GAO DI ELECTRONICS CO., LTD

TOLERANCE UNLESS OTHERWISE STATED : Up to 5 ±0.2; Above 5 ~ 15 ±0.3; Above 15 ~ 30 ±0.4; Above 30 ~ 50 ±0.5; Angle ±0.3°

3RD. ANGEL'S | UNITS | MM

DRAWN BY: Jack Lu	DATE 03/30/23	MAT'L	
CHECKED BY: Jacky Chen	DATE 03/30/23	FINISH	
APPROVED BY: Tony Kao	DATE 03/30/23	SCALE 1 : 1	SHEET NO. 1 of 1

TITLE	CONNECTOR		
MODLE	USB 3.1 TYPE C 單排SMT墊高7.55 L 8.0mm 高導電銅		
DWG NO.	SBC-160S2BH-20xx-S410	SIZE	A4
PART NO.	SBC-160S2BH-20xx-S410	VER	R5