DIMNSIONS

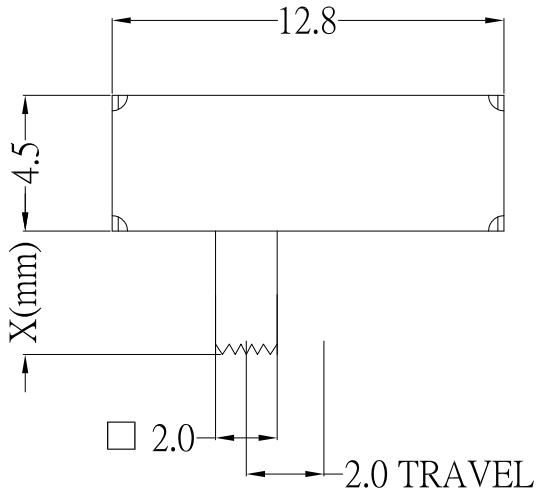

SCHEMATIC

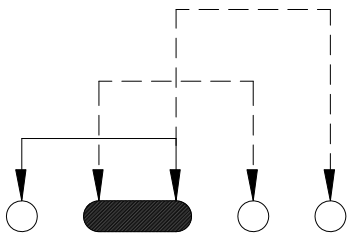

P.C.B MOUNTING PATTERN

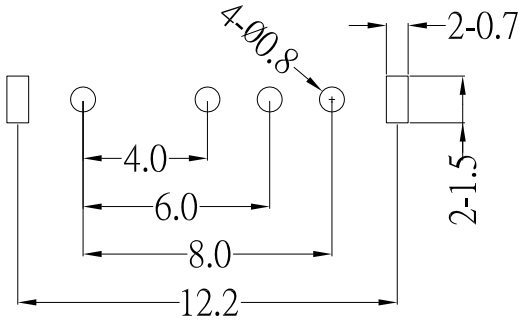

Model No.	X(mm)
SK-13D01-G2	2mm
SK-13D01-G3	3mm
SK-13D01-G4	4mm
SK-13D01-G5	5mm
SK-13D01-G6	6mm
SK-13D01-G7	7mm
SK-13D01-G8	8mm
SK-13D01-G9	9mm

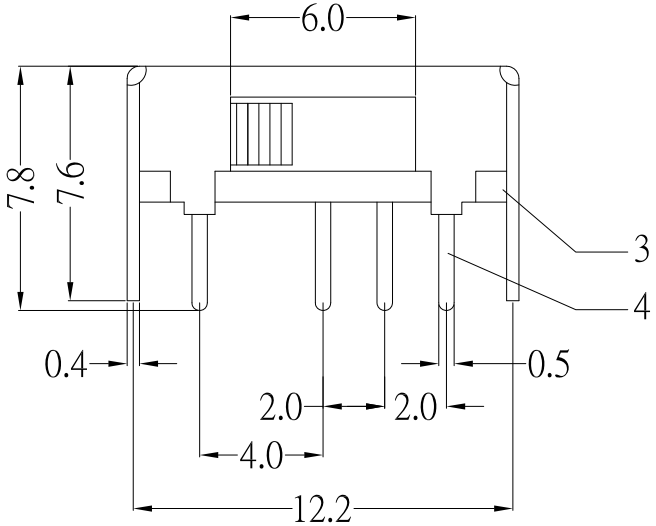

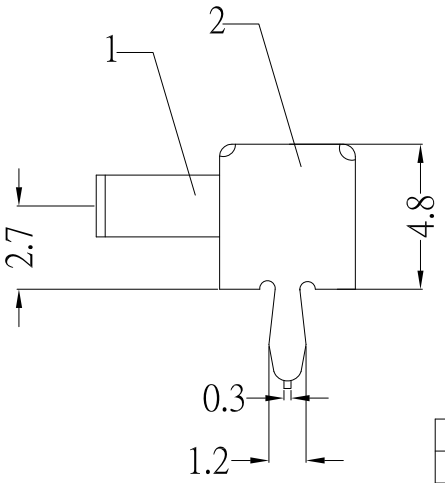

SPECIFICATIONS

Rating	DC 50V 0.3A
Circuit	1P - 3T
Timing	Shorting
Contact Resistance	200mΩ Max.
Insulation Resistance	100MΩ Min.
Operating Force	250gf ±100gf
Operating Life (cycles)	10,000

NO.	DESCRIPTION	QTY	MATERIAL	REMARK
6	CONTACT CLIP	1	PHOSPHOR BRONZE	Ag-Plated
5	SPRING	1	STAINLESS STEEL	
4	TERMINAL	4	BRASS	Ag-Plated
3	BASE	1	PHENOLIC RESIN	Natural
2	FRAME	1	SPCC	Ni-Plated
1	KNOB	1	POM	Black

ITEM NO.	DESCRIPTION	DRAWN	DATE
3	更新Contact Resistance	Jack	111914
2	更新爲A0版	Jack	091114
1	更新材質及鍍層	Jack	060313

東莞市高迪電子有限公司
DONG GUAN GAO DI ELECTRONICS CO., LTD

TOLERANCE UNLESS OTHERWISE STATED : Up to 5 ±0.2; Above 5 ~ 15 ±0.3; Above 15 ~ 30 ±0.4; Above 30 ~ 50 ±0.5; Angle ±0.3°

3RD. ANGEL'S | UNITS | MM

DRAWN BY: Jack Lu	DATE 11/19/14	MAT'L		TITLE	SWITCH		
CHECKED BY: Jacky Chen	DATE 11/19/14	FINISH		MODLE	SLIDE SWITCH		
APPROVED BY: Tony Kao	DATE 11/19/14	SCALE	1 : 1	DWG NO.	SK-13D01-Gx-S191	SIZE	A4
		SHEET NO.	1 of 1	PART NO.	SK-13D01-Gx-S191	VER	A1