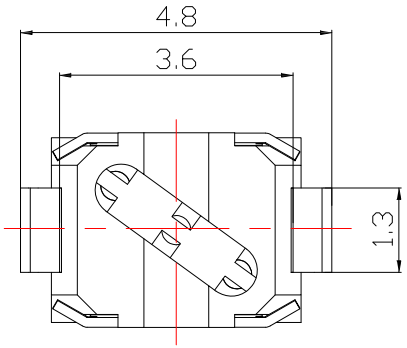

Model No.	L (mm)	Knob Color
TS-A85U	2.0	BLACK
TS-A85AU	2.5	BLACK
TS-A85GU	4.0	BLACK
TS-A85CU	7.0	BLACK

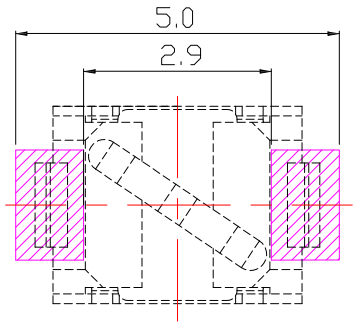

P.C.B. LAYOUT MOUNTING PATTERN

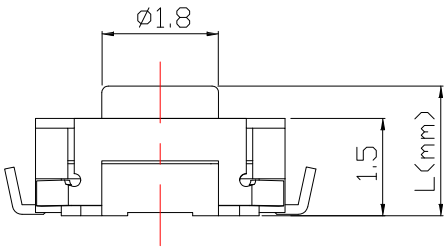

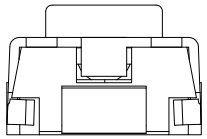

SPECIFICATIONS

Rating	DC 12V 50mA			
Contact Resistance	100mΩ Max.			
Travel	0.15 ± 0.1mm			
Operating Force	2	160±30gf	3	250±50gf
Operating Life(cycles)	100,000			

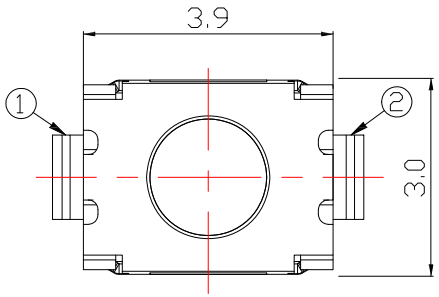

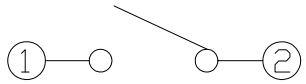

CIRCUIT DIAGRAM

NO.	DESCRIPTION	QTY	MATERIAL	PLATING
F	DUST COVER	1	PI FILM	
E	TERMINAL	4	BRASS	Ag plated
D	CONTACT	1	SUS	Ag plated
C	COVER	1	SUS	
B	CASE	1	LCP	
A	STEM	1	LCP	

ITEM NO.	DESCRIPTION	DRAWN	DATE
6	更新圖面	Jack	041123
5	新增材質表	Jack	080620
4	更新Knob Color	Jack	090516
3	更新高度選項	Jack	051916
2	更新travel	Jack	070815
1	刪除1.80高度選項	Jack	110714

東莞市高迪電子有限公司
DONG GUAN GAO DI ELECTRONICS CO., LTD

TOLERANCE UNLESS OTHERWISE STATED : Up to 5 ±0.2; Above 5 ~ 15 ±0.3; Above 15 ~ 30 ±0.4; Above 30 ~ 50 ±0.5; Angle ±0.3°

3RD. ANGEL'S | UNITS MM

DRAWN BY: Jack Lu	DATE 04/11/23	MAT'L		TITLE	SWITCH		
CHECKED BY: Jacky Chen	DATE 04/11/23	FINISH		MODLE	TACT SWITCH		
APPROVED BY: Tony Kao	DATE 04/11/23	SCALE	1 : 1	DWG NO.	TS-A85xU-x-S126	SIZE	A4
		SHEET NO.	1 of 1	PART NO.	TS-A85xU-x-S126	VER	R6